DISCIPLINE | SIGNATURE | DATE

DWG.NO 2011074-GPGG-00-EMPR-DBDC-0001

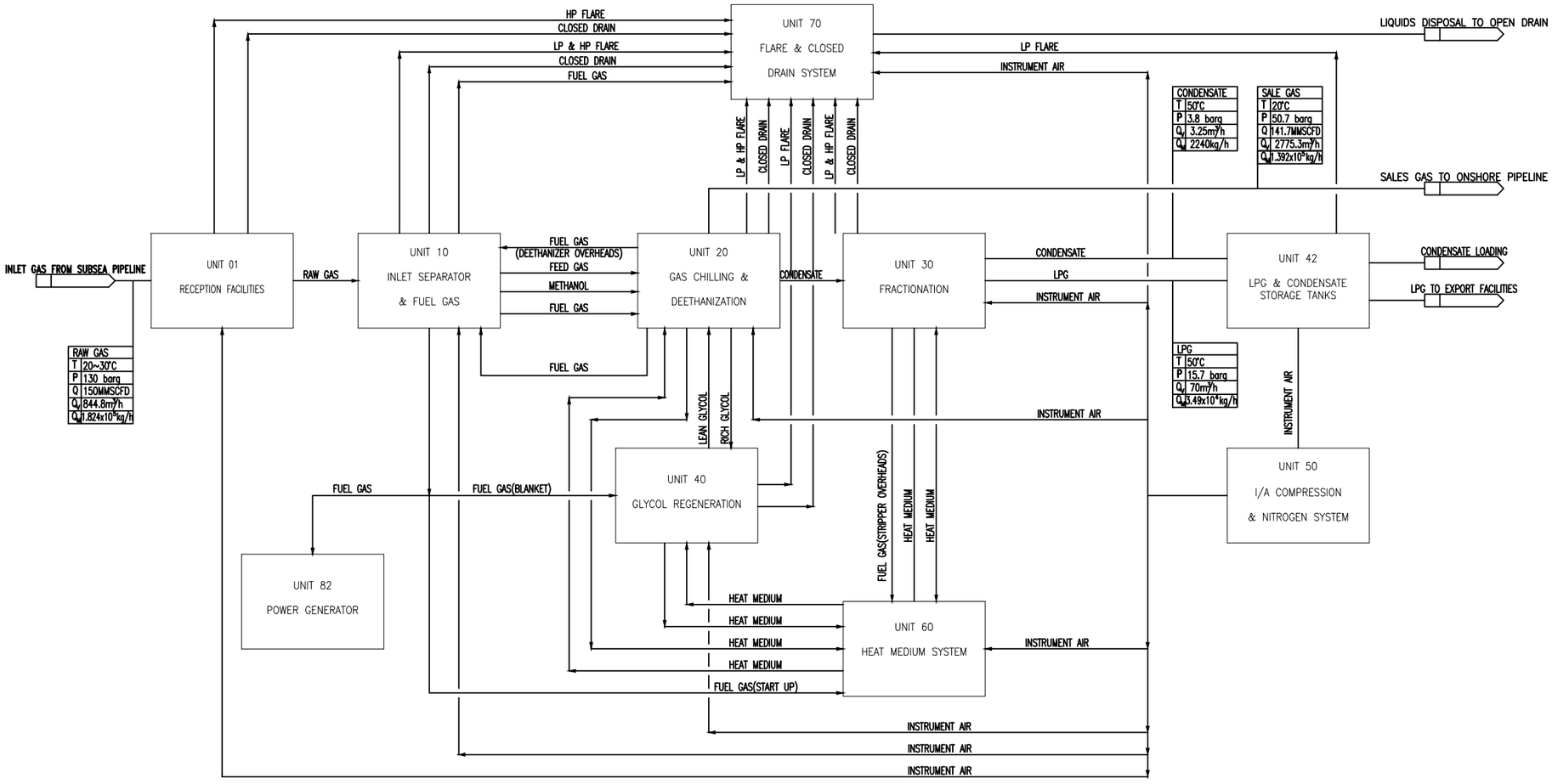

REV	DESCRIPTION	ORIG	CH'D	REV'D	APP'D	CLIENT	DATE
D01	ISSUED FOR COMMENTS	LI JIN	WANG NIANBING	ZHU CHAOJUN			10/10/2012
D00	ISSUED FOR INTER-DISCIPLINARY CHECK	LI JIN	WANG NIANBING	ZHU CHAOJUN			27/09/2012

GHANA GAS

Sinopec

GHANA EARLY PHASE GAS INFRASTRUCTURE PROJECT

ORIGINAL DWG SIZE : A1

SCALE :

GAS PROCESSING PLANT

BLOCK FLOW DIAGRAM FOR WHOLE PLANT

CLIENT: GHANA NATIONAL GAS COMPANY

SH. 1 of 1

DESCRI.	PROJECT NO.						SCOPE		UNIT		DISCIPLINE		DOC. TYPE		SEQUENCE		
DWG.NO	2	0	1	1	0	7	4	G	P	G	0	0	E	M	P	R	D	I	B	C	0	0	0	1